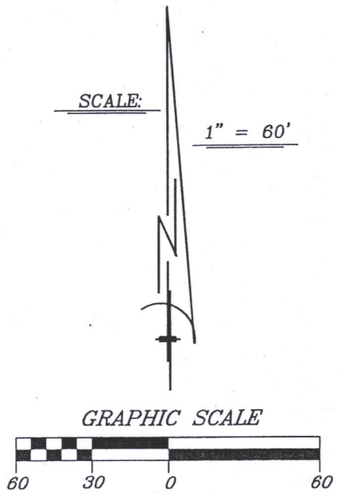

LEGEND

- ○ FOUND IRON PIPE
- • FOUND IRON ROD

BEARINGS HEREON RELATE TO THE SOUTHERLY LINE OF PARADISE DRIVE, ASSUMED BEARING SOUTH 88°15'59" EAST.

(EXCEPT AS SHOWN)

MONUMENTATION BY WRITTEN AGREEMENT WITH NATHAN AND ROBYN HENRICHS HAS BEEN WAIVED IN ACCORDANCE WITH A-E 7.01(2) OF THE WISCONSIN ADMINISTRATIVE CODE.

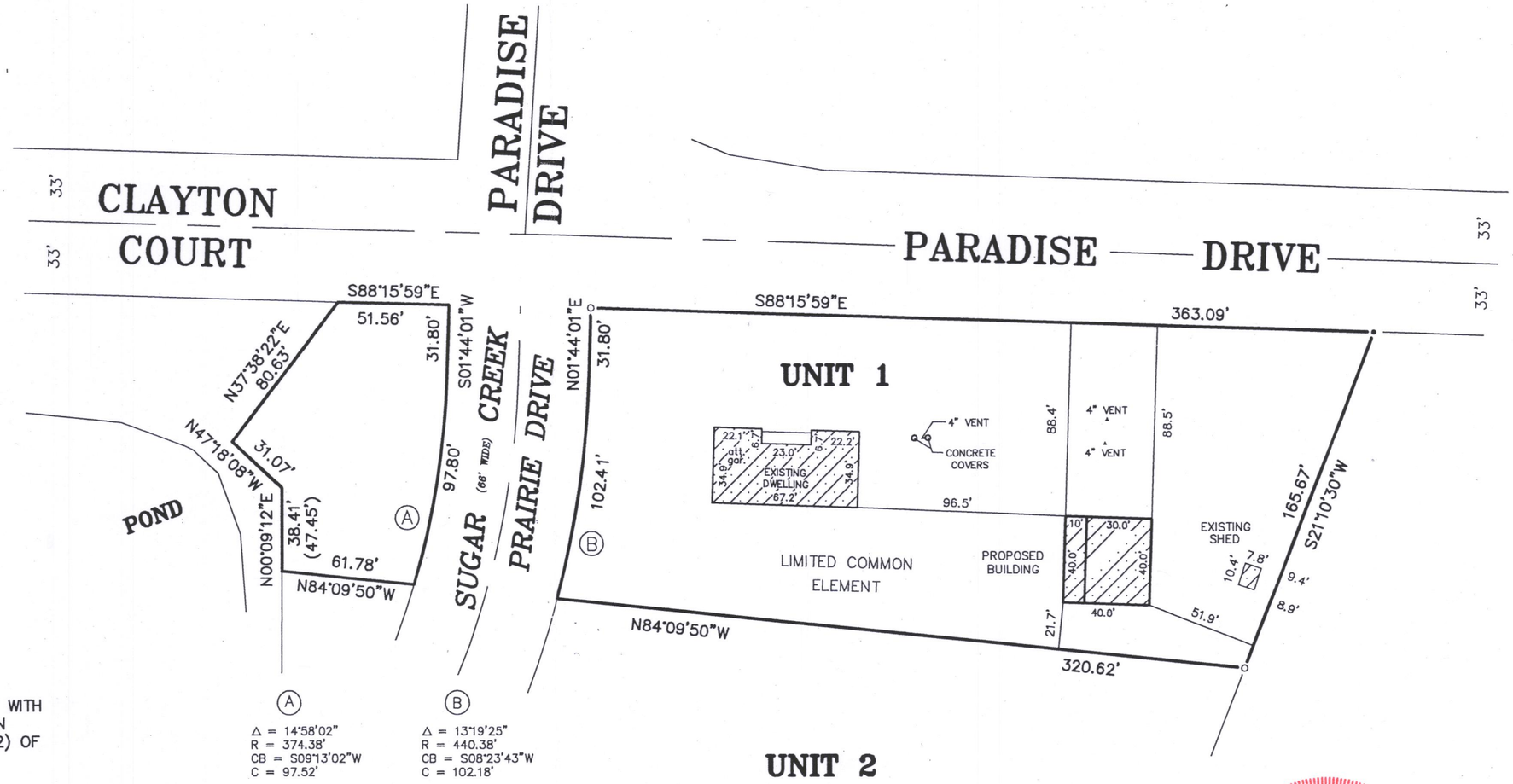

PLAT OF SURVEY
-OF-

UNIT 1 OF SUGAR CREEK ACRES, A CONDOMINIUM IN THE TOWN OF SPRING PRAIRIE, WALWORTH COUNTY, WISCONSIN. BEING A PART OF THE SOUTHEAST 1/4 OF THE NORTHEAST 1/4 AND THE NORTHEAST 1/4, NORTHWEST 1/4, SOUTHWEST 1/4 AND SOUTHEAST 1/4 OF THE SOUTHEAST 1/4 OF SECTION 15, TOWNSHIP 3 NORTH RANGE 18 EAST OF THE FOURTH PRINCIPAL MERIDIAN.

SURVEY FOR: ROBYN AND NATHAN HENRICHS

SURVEY LOCATION: N6294 SUGAR CREEK PRAIRIE ROAD

PROPOSED BUILDING WAS STAKED ON ACTUAL CORNERS WITH 7 FOOT CONTROL ON THE SOUTH BUILDING LINE. THE CONTRACTOR WILL BE RESPONSIBLE TO FIELD VERIFY ALL STAKES FOR LOCATION AND DIMENSION PRIOR TO CONSTRUCTION. IF ANY DISCREPANCIES SHOULD ARISE, NOTIFY THIS OFFICE AT ONCE.

"I hereby certify that I have surveyed the above described property and that the above map is a correct representation thereof and shows the size and location of the property, its exterior boundaries, the location of all visible structures and dimensions of all principal buildings thereon, apparent easements, roadways and encroachments, if any."

"This survey is made for the use of the present owners of the property, and those who purchase, mortgage, or guarantee the title thereto within one year from date hereof."

RECEIVED
JUL 31 2019
By Jan

WISCONSIN
ROBERT J. WETZEL
S-1778
BURLINGTON, WI
LAND SURVEYOR

THIS IS NOT AN ORIGINAL PRINT UNLESS THIS SEAL IS RED.

B.W. SURVEYING, INC.

LAND SURVEYS
MAPPING AND PLANNING

412 N. PINE STREET
BURLINGTON, WI 53105
(262)-767-0225

ROBERT J. WETZEL S-1778

APRIL 10, 2019 — DATE

9846 — JOB NUMBER

08CA-1 318-1300